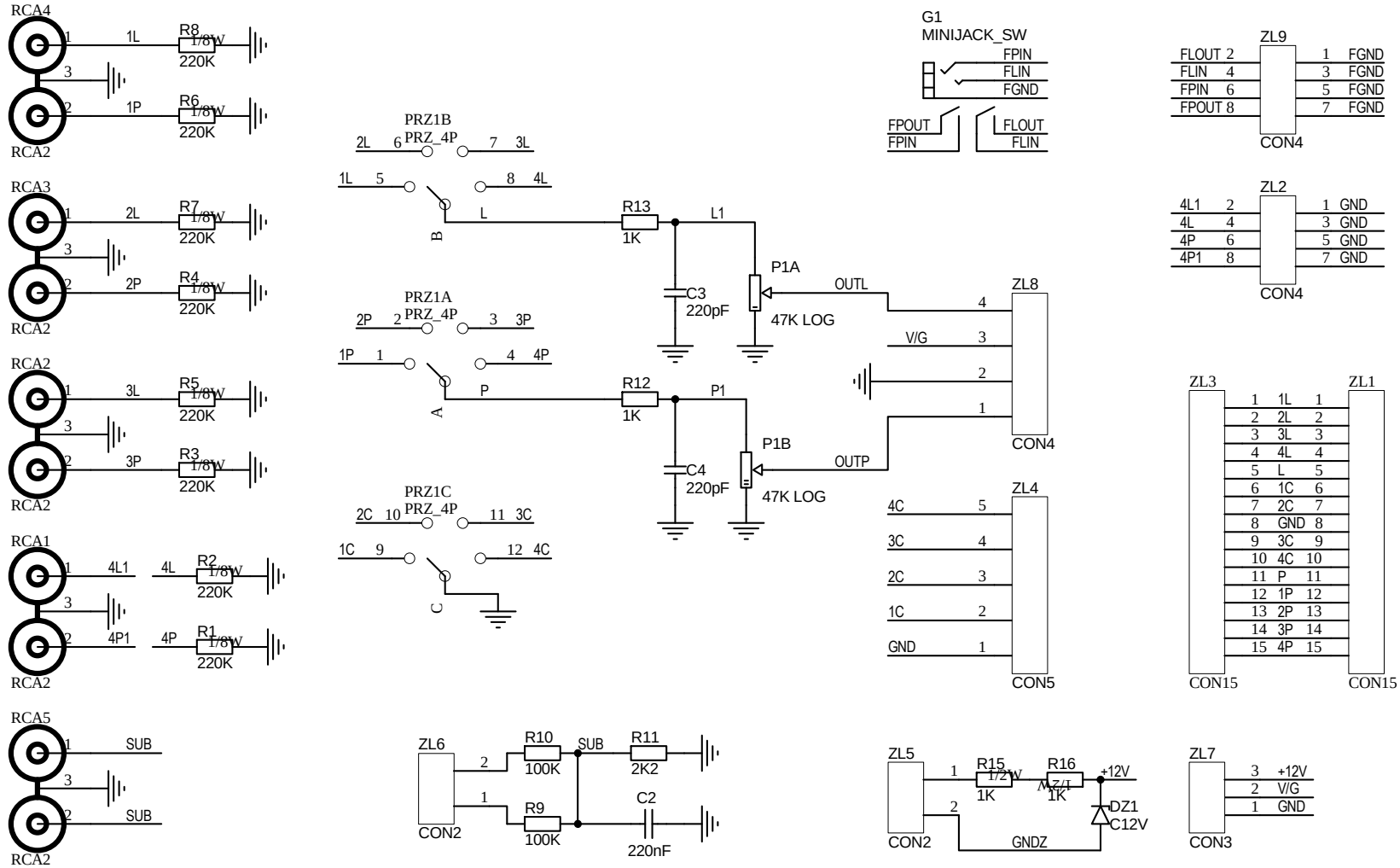

Title		
SELECTOR UNIAMP STEREO V3		
Size A	Number	Revision
Date: 30-Oct-2010	Sheet of	IRK2010
File: E:\Moje dokumenty\protel\uniamp150\selector\selector.DDB	Drawn By:	